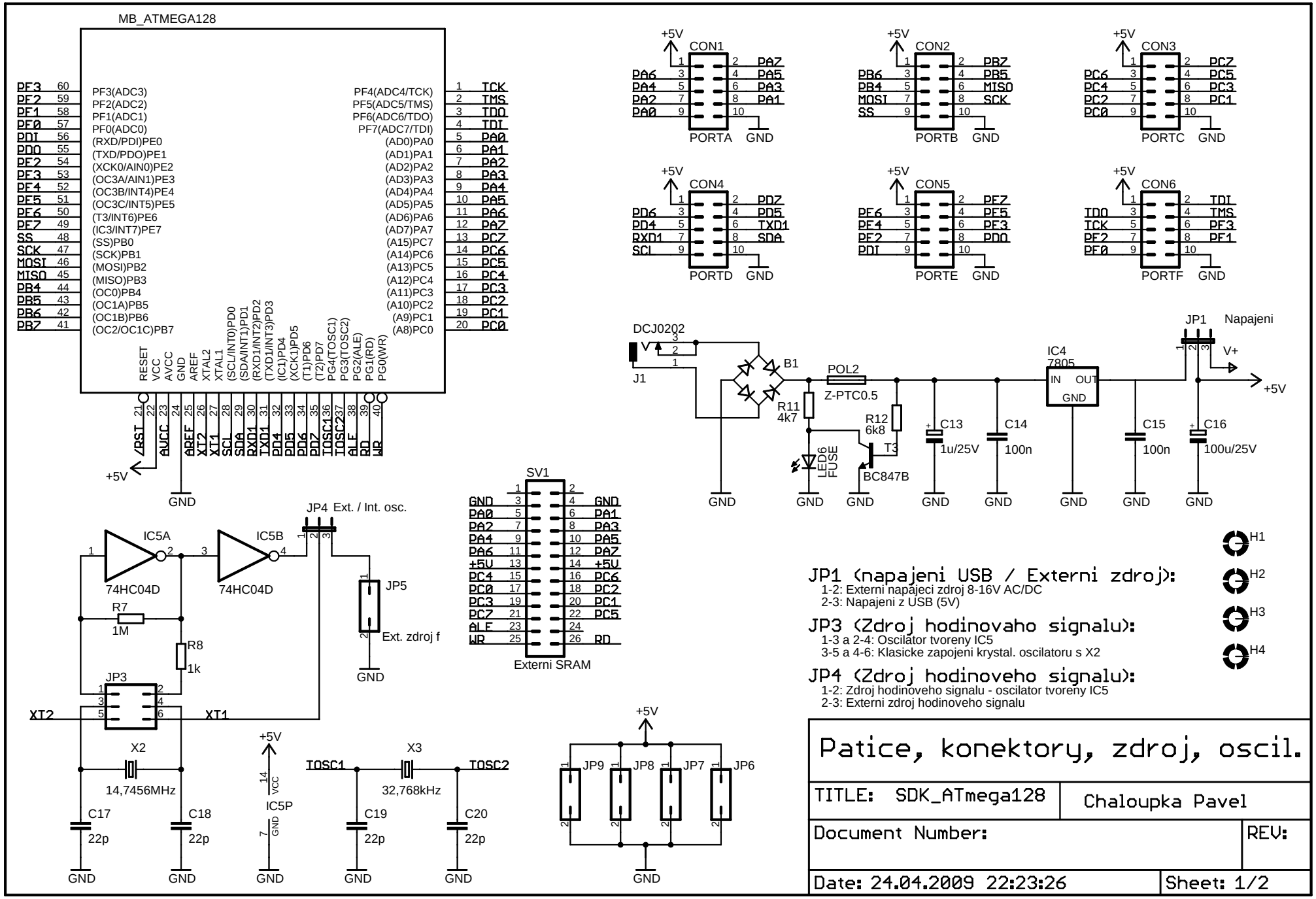
MB_ATMEGA128
PF3(ADC3)
PF2(ADC2)
PF1(ADC1)
PF0(ADC0)
(RXD/PDI)PE0
(TXD/PDO)PE1
(XCK0/AIN0)PE2
(OC3A/AIN1)PE3
(OC3B/INT4)PE4
(OC3C/INT5)PE5
(T3/INT6)PE6
(IC3/INT7)PE7
(SS)PB0
(SCK)PB1
(MOSI)PB2
(MISO)PB3
(OC0)PB4
(OC1A)PB5
(OC1B)PB6
(OC2/OC1C)PB7
PF4(ADC4/TCK)
PF5(ADC5/TMS)
PF6(ADC6/TDO)
PF7(ADC7/TDI)
(AD0)PA0
(AD1)PA1
(AD2)PA2
(AD3)PA3
(AD4)PA4
(AD5)PA5
(AD6)PA6
(AD7)PA7
(A15)PC7
(A14)PC6
(A13)PC5
(A12)PC4
(A11)PC3
(A10)PC2
(A9)PC1
(A8)PC0
RESET VCC AVCC GND AREF XTAL2 XTAL1 (SCL/INT0)PD0 (SDA/INT1)PD1 (RXD1/INT2)PD2 (TXD1/INT3)PD3 (IC1)PD4 (XCK1)PD5 (T1)PD6 (T2)PD7 PG4(TOSC1) PG3(TOSC2) PG2(ALE) PG1(RD) PG0(WR)
+5V
GND
CON1
PORTA
CON2
PORTB
CON3
PORTC
CON4
PORTD
CON5
PORTE
CON6
PORTF
DCJ0202
J1
B1
POL2
Z-PTC0.5
R11
4k7
R12
6k8
T3
BC847B
LED6
FUSE
C13
1u/25V
C14
100n
IC4
7805
IN OUT
C15
100n
C16
100u/25V
JP1 Napajeni
V+
SV1
Externi SRAM
JP4 Ext. / Int. osc.
IC5A
74HC04D
IC5B
74HC04D
R7
1M
R8
1k
JP5
Ext. zdroj f
JP3
XT2
XT1
X2
14,7456MHz
C17
22p
C18
22p
IC5P
VCC
GND
TOSC1
X3
32,768kHz
TOSC2
C19
22p
C20
22p
JP9
JP8
JP7
JP6
H1
H2
H3
H4
JP1 (napajeni USB / Externi zdroj):
1-2: Externi napajeci zdroj 8-16V AC/DC
2-3: Napajeni z USB (5V)
JP3 (Zdroj hodinovaho signalu):
1-3 a 2-4: Oscilator tvoreny IC5
3-5 a 4-6: Klasicke zapojeni krystal. oscilatoru s X2
JP4 (Zdroj hodinoveho signalu):
1-2: Zdroj hodinoveho signalu - oscilator tvoreny IC5
2-3: Externi zdroj hodinoveho signalu
Patice, konektory, zdroj, oscil.
TITLE: SDK_ATmega128
Chaloupka Pavel
Document Number:
REV:
Date: 24.04.2009 22:23:26
Sheet: 1/2

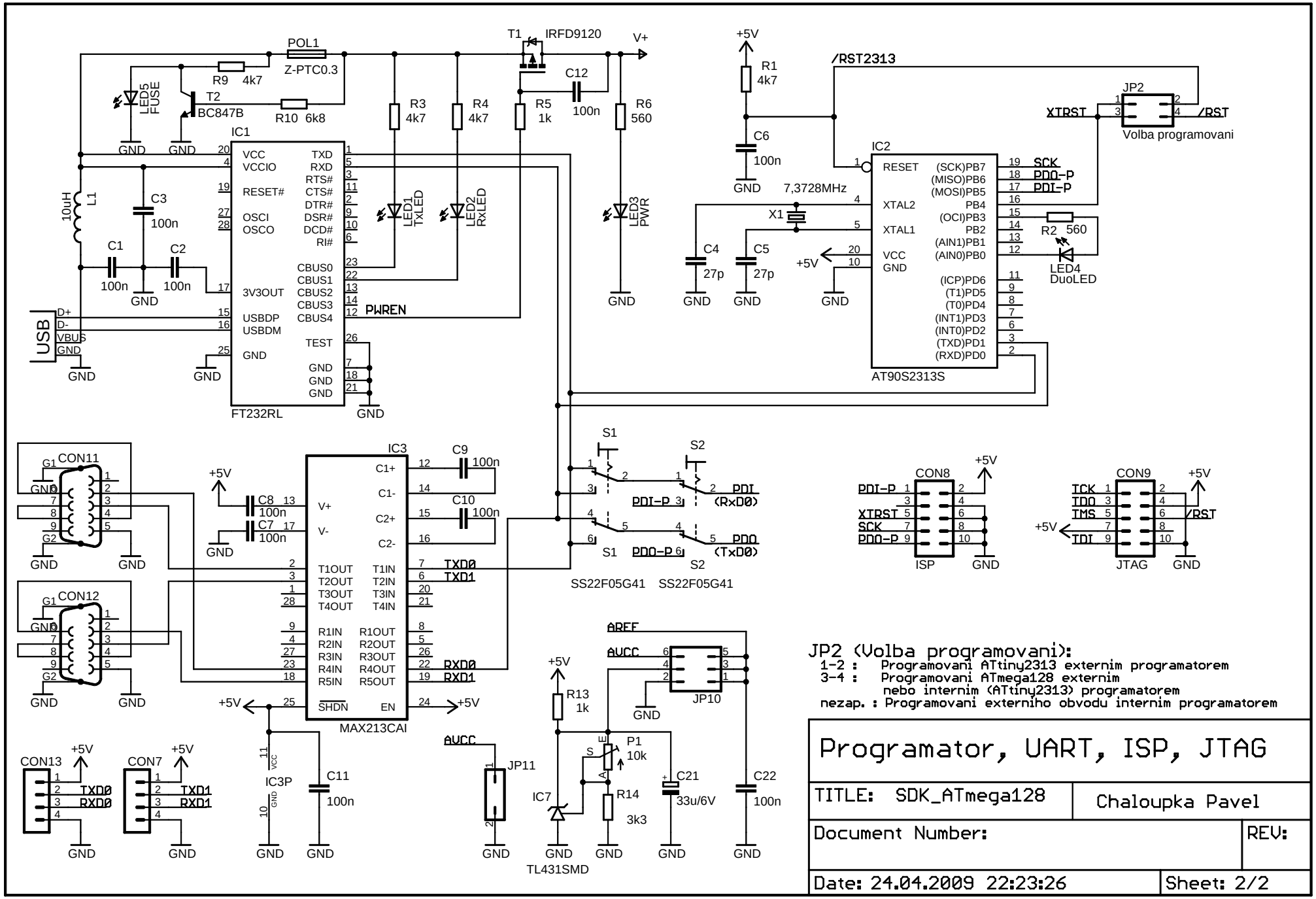

JP2 (Volba programovani):
1-2 : Programovani ATtiny2313 externim programatorem
3-4 : Programovani ATmega128 externim
nebo internim (ATtiny2313) programatorem
nezap. : Programovani externiho obvodu internim programatorem

Programator, UART, ISP, JTAG	
TITLE: SDK_ATmega128	Chaloupka Pavel
Document Number:	REV:
Date: 24.04.2009 22:23:26	Sheet: 2/2